PP

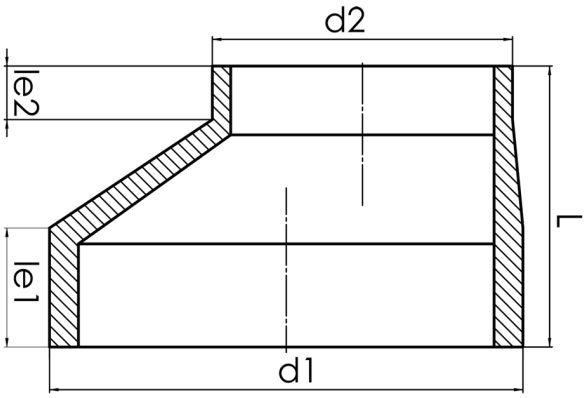

SDR 11

	d1 [mm]	d2 [mm]	le1 [mm]	le2 [mm]	L [mm]	kg
24145401	450	400	75	40	150	7,10

© STAR Piping Systems GmbH