PP

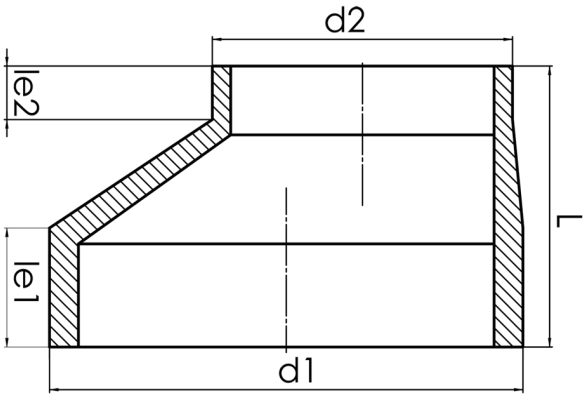

SDR 11

	d1 [mm]	d2 [mm]	le1 [mm]	le2 [mm]	L [mm]	kg
24150281	500	280	107	40	261	13,60

© STAR Piping Systems GmbH