45°

PE100

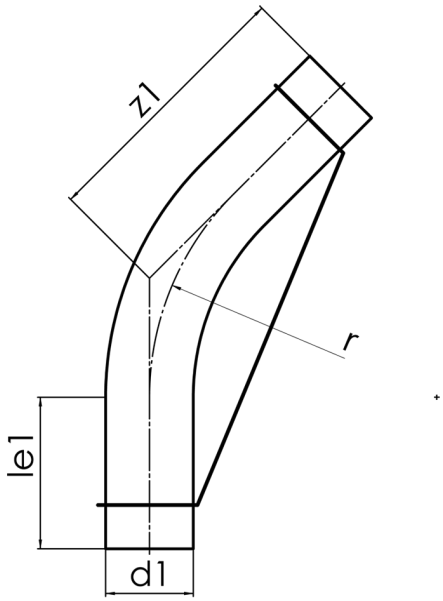

SDR 11

	d1 [mm]	le1* [mm]	z1 [mm]	r [mm]	kg
41405052	50	100	200	125	0,22

© STAR Piping Systems GmbH