45°

PE100

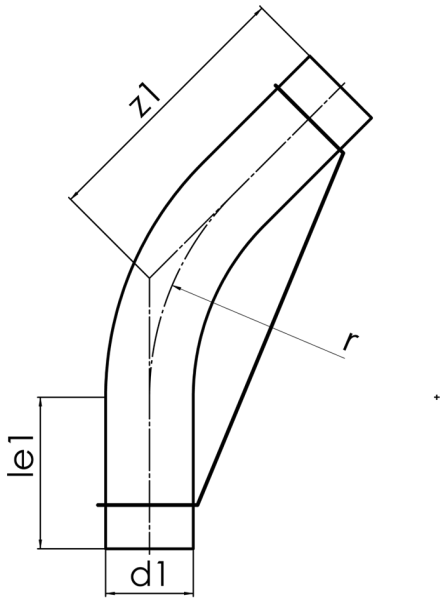

SDR 17

	d1 [mm]	le1* [mm]	z1 [mm]	r [mm]	kg
41405121	125	150	300	312,5	1,52

© STAR Piping Systems GmbH