45°

PE100

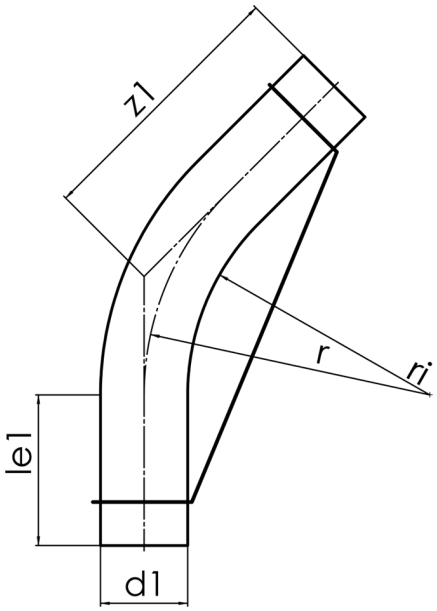

SDR 17

	d1 [mm]	le1* [mm]	z1 [mm]	r [mm]	kg
41407251	250	250	900	1225	14,77

© STAR Piping Systems GmbH