45°

PE100

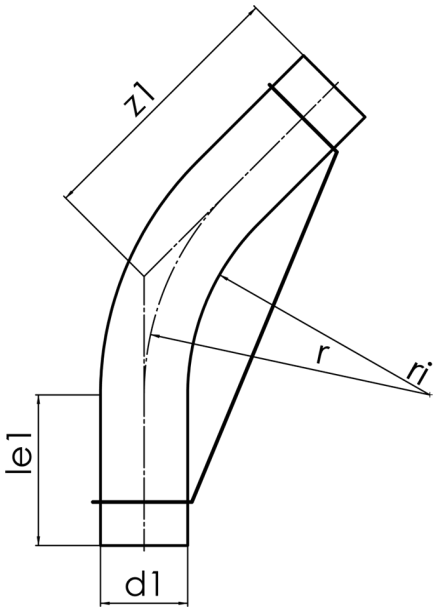

SDR 11

	d1 [mm]	le1* [mm]	z1 [mm]	r [mm]	kg
41408072	75	100	2390	1788	2,32

© STAR Piping Systems GmbH