45°

PE100

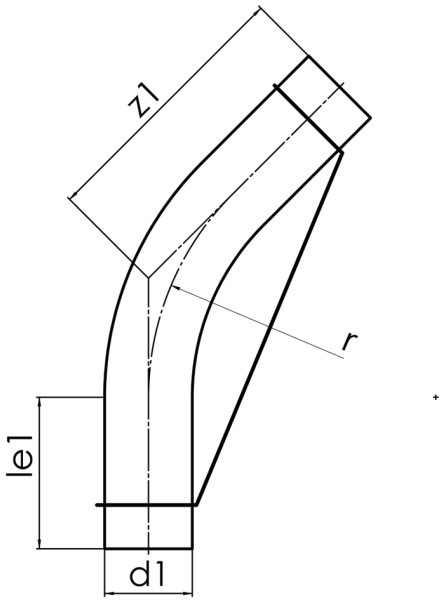

SDR 11

	d1 [mm]	le1* [mm]	z1 [mm]	r [mm]	kg
41435452	450	300	1350	1575	131,39

© STAR Piping Systems GmbH