60°

PE100

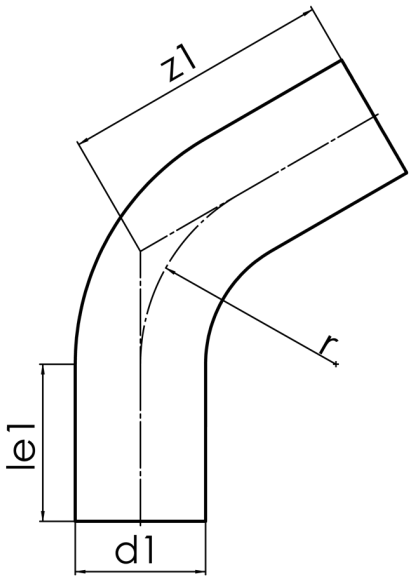

SDR 17

	d1 [mm]	le1* [mm]	z1 [mm]	r [mm]	kg
41600711	710	350	1450	1128	183,03

© STAR Piping Systems GmbH