60°

PE100

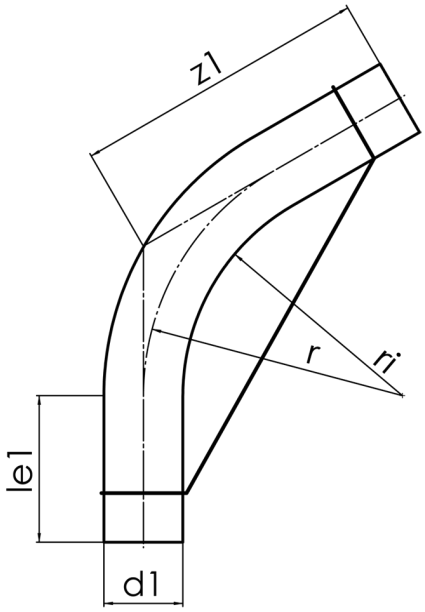

SDR 11

	d1 [mm]	le1* [mm]	z1 [mm]	r [mm]	kg
41606142	140	150	650	770	5,77

© STAR Piping Systems GmbH