90°

PE100

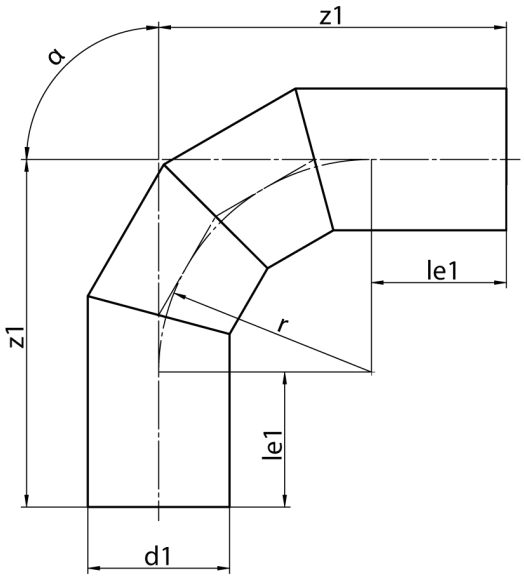

SDR 33

	d1 [mm]	le1 [mm]	z1 [mm]	r [mm]	kg
41903143	140	150	360	210	1,12

© STAR Piping Systems GmbH