90°

PE100

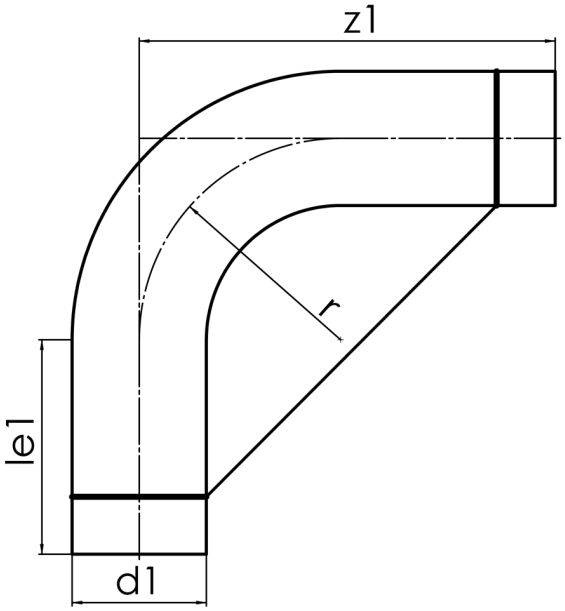

SDR 17

	d1 [mm]	le1* [mm]	z1 [mm]	r [mm]	kg
41905281	280	250	1000	700	22,18

© STAR Piping Systems GmbH