90°

PE100

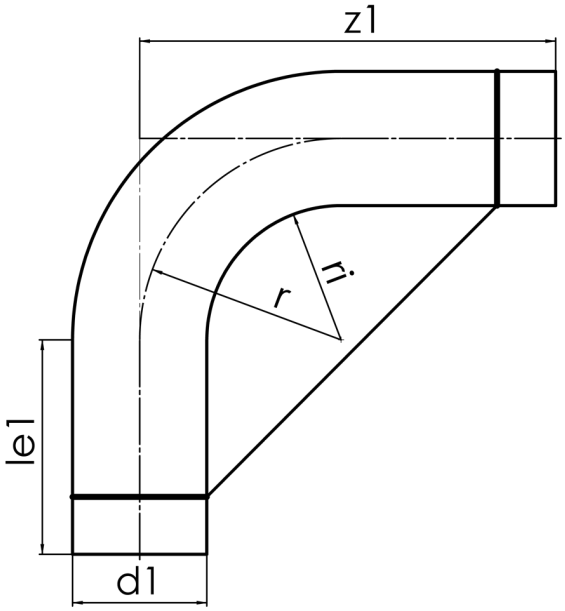


## SDR 17

| | d1 [mm] | le1* [mm] | z1 [mm] | r [mm] | kg |
|---|---|---|---|---|---|
| 41908181 | 180 | 150 | 2690 | 1840 | 17,90 |

© STAR Piping Systems GmbH