90°

PE100

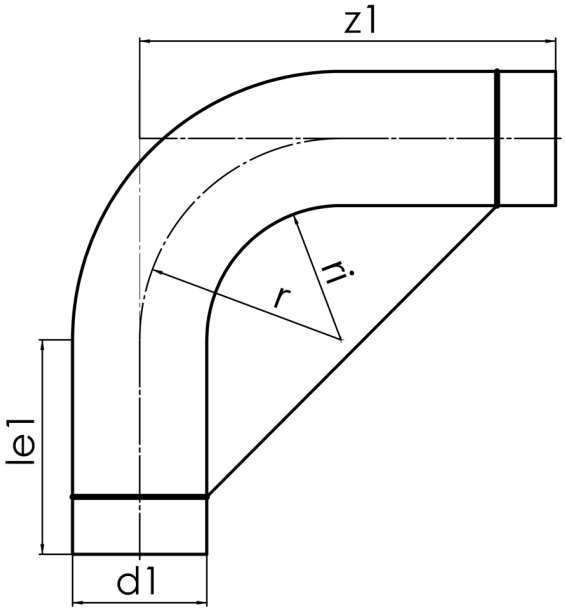

SDR 11

	d1 [mm]	le1* [mm]	z1 [mm]	r [mm]	kg
41908282	280	250	2700	1890	66,18

© STAR Piping Systems GmbH