PE100

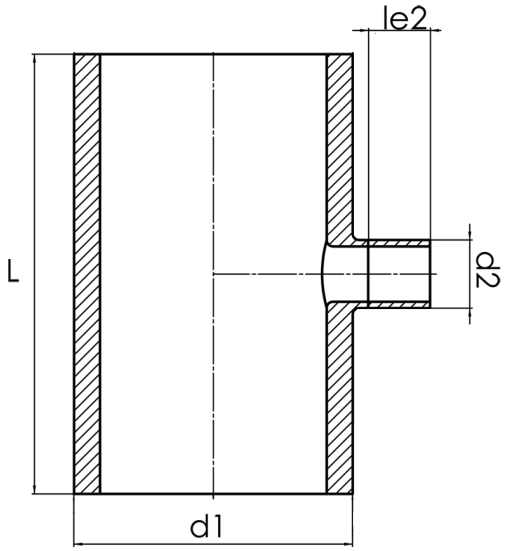

SDR 11

	d1 [mm]	d2 [mm]	le2 [mm]	L [mm]	kg
42316062	160	63	150	500	3,50

© STAR Piping Systems GmbH