PE100

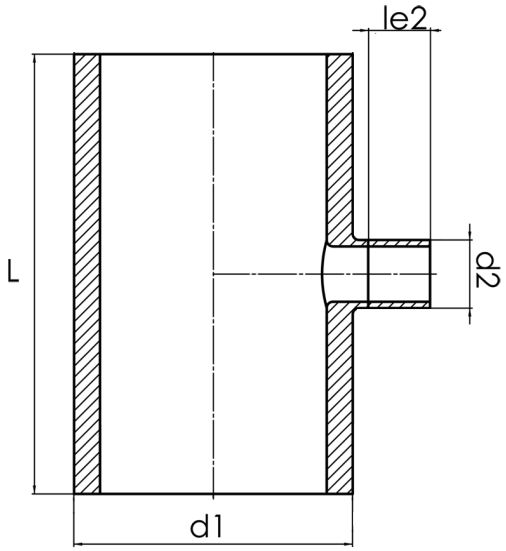

SDR 11

	d1 [mm]	d2 [mm]	le2 [mm]	L [mm]	kg
42318072	180	75	150	500	4,50

© STAR Piping Systems GmbH