PE100

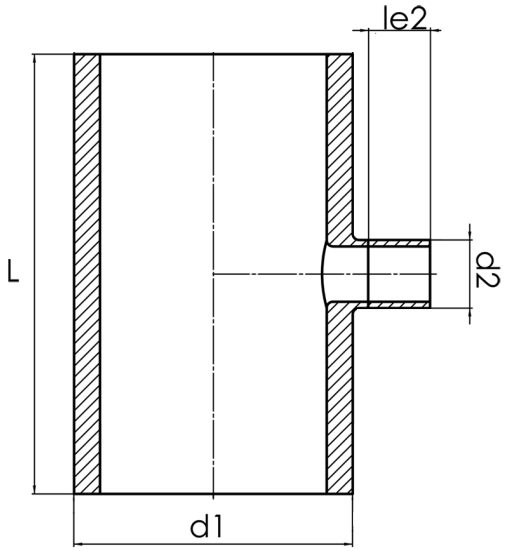


## SDR 11

| | d1 [mm] | d2 [mm] | le2 [mm] | L [mm] | kg |
|---|---|---|---|---|---|
| 42322112 | 225 | 110 | 150 | 500 | 7,10 |

© STAR Piping Systems GmbH