PE100

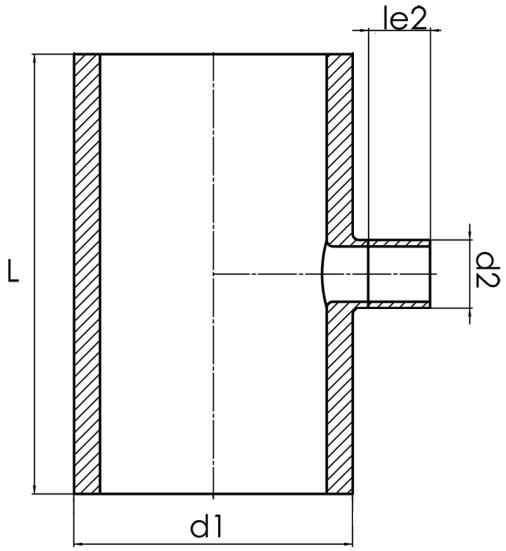

SDR 17

	d1 [mm]	d2 [mm]	le2 [mm]	L [mm]	kg
42340121	400	125	150	800	21,60

© STAR Piping Systems GmbH