PE100

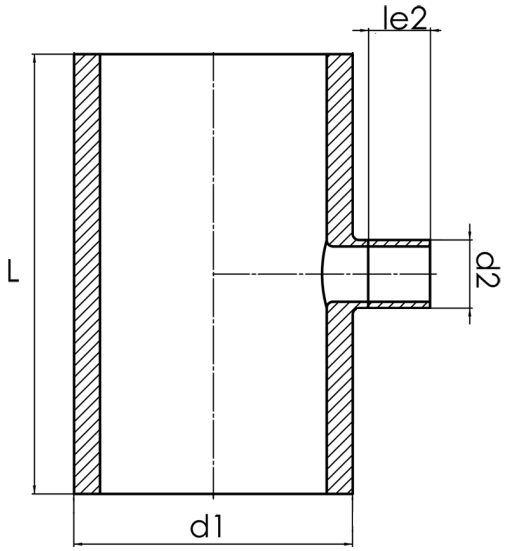

SDR 11

	d1 [mm]	d2 [mm]	le2 [mm]	L [mm]	kg
42350202	500	200	150	1000	66,80

© STAR Piping Systems GmbH