PE100

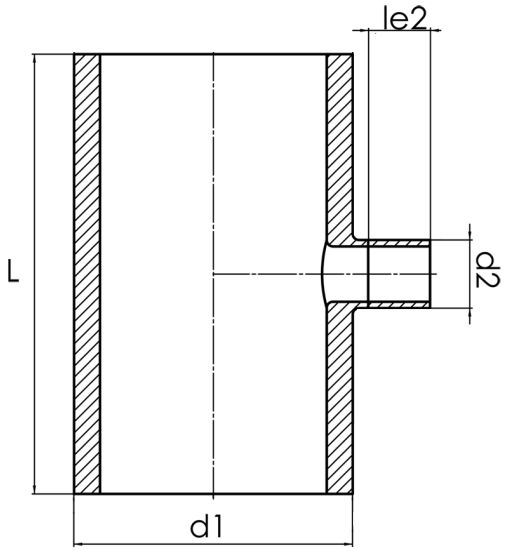

SDR 17

	d1 [mm]	d2 [mm]	le2 [mm]	L [mm]	kg
42350281	500	280	250	1050	47,70

© STAR Piping Systems GmbH