PE100

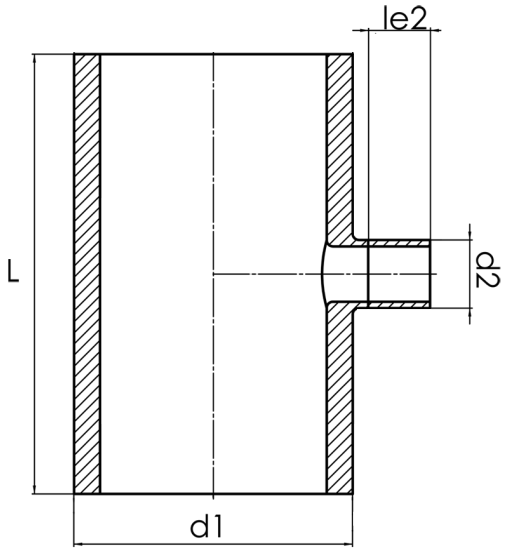

SDR 11

	d1 [mm]	d2 [mm]	le2 [mm]	L [mm]	kg
42350352	500	355	300	1200	85,00

© STAR Piping Systems GmbH