PE100

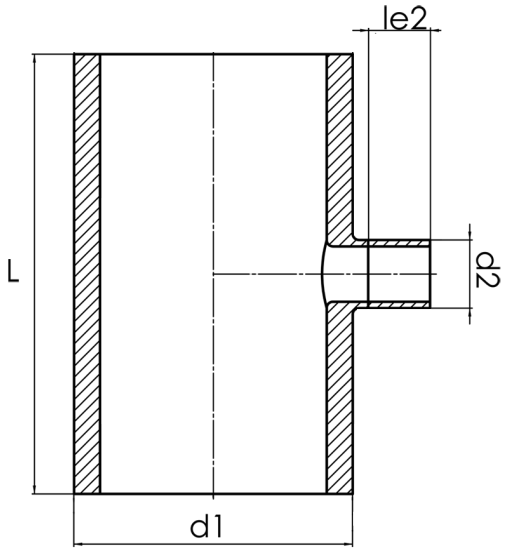

SDR 11

	d1 [mm]	d2 [mm]	le2 [mm]	L [mm]	kg
42356312	560	315	300	1200	89,50

© STAR Piping Systems GmbH