PE100

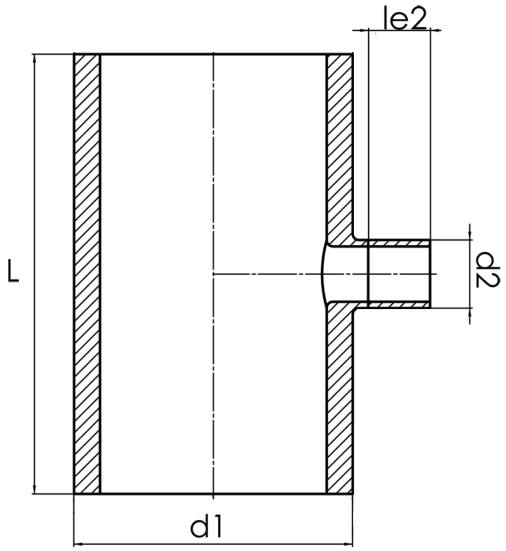

SDR 17

	d1 [mm]	d2 [mm]	le2 [mm]	L [mm]	kg
42380281	800	280	250	1100	116,50

© STAR Piping Systems GmbH