PE100

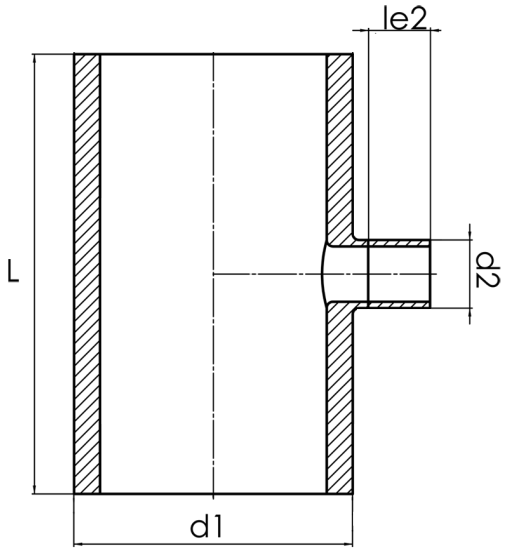

SDR 17

	d1 [mm]	d2 [mm]	le2 [mm]	L [mm]	kg
42380501	800	500	350	1300	151,10

© STAR Piping Systems GmbH