PE100

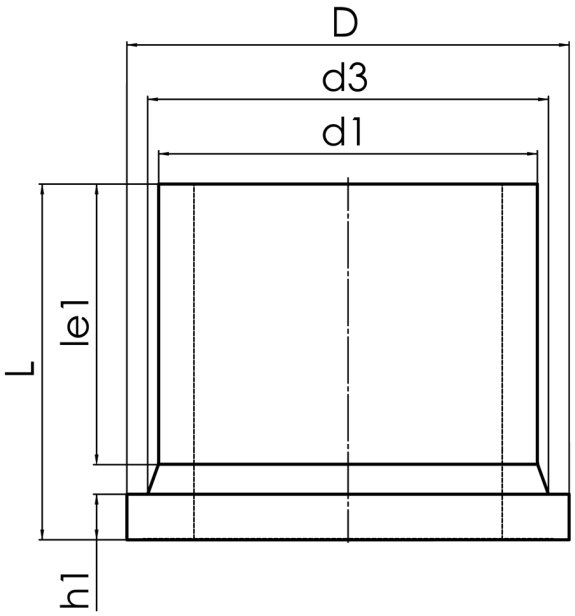

SDR 11

	d1 [mm]	d3 [mm]	D [mm]	le1 [mm]	L [mm]	h1 [mm]	kg
43003352	355	373	430	210	280	40	11,00

© STAR Piping Systems GmbH