PE100

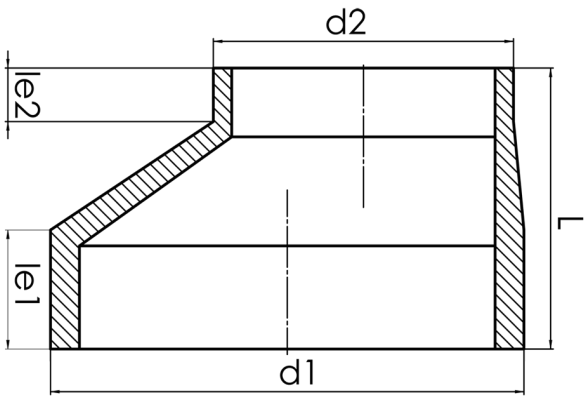

SDR 17

	d1 [mm]	d2 [mm]	le1 [mm]	le2 [mm]	L [mm]	kg
44156401	560	400	113	40	251	12,80

© STAR Piping Systems GmbH