PE100

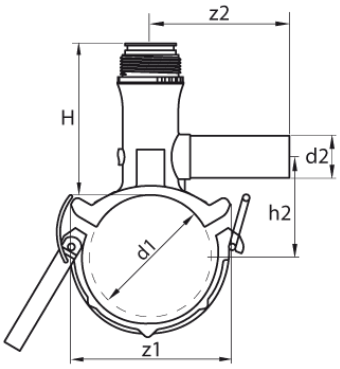

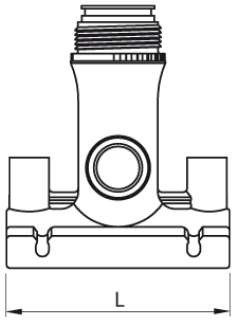

SDR 17 / 11

	d1 [mm]	d2 [mm]	L [mm]	z2 [mm]	H [mm]	h2 [mm]	VE	kg
47006022	63	25	120	105	119	62	10	0,53

© STAR Piping Systems GmbH