PE100

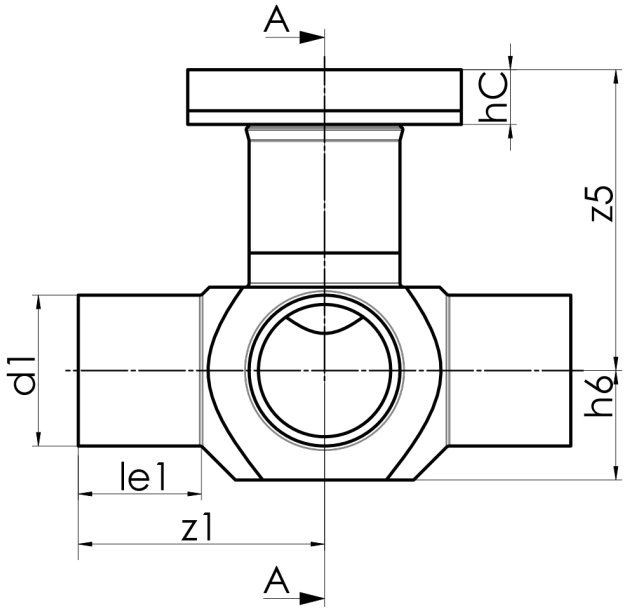

SDR 17

	DN [mm]	d1 [mm]	d2 [mm]	le1 [mm]	le2 [mm]	L [mm]	z2 [mm]	h6 [mm]	z5 [mm]	hC [mm]	kg
48302131	100	125	125	95	150	400	250	90	230	45	6,45

© STAR Piping Systems GmbH